RICHARD CORDRAY

OHIO ATTORNEY GENERAL

OHIO

PEACE OFFICER TRAINING ACADEMY

OHIO'S CONCEALED CARRY LAW

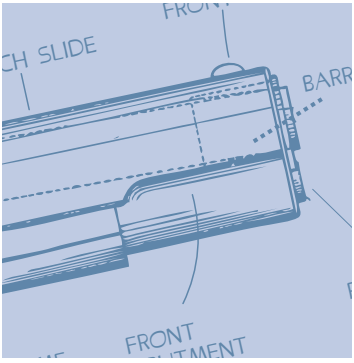

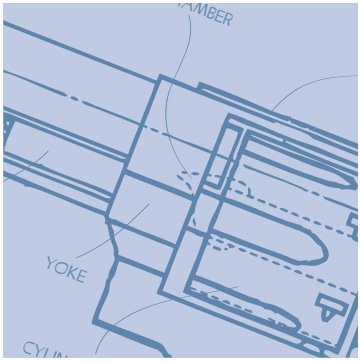

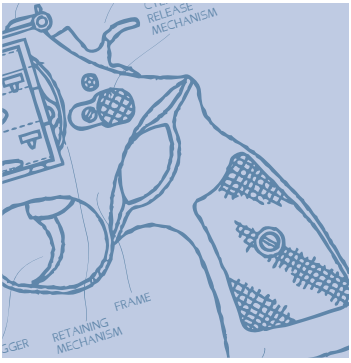

Laws Change

For the most current and up-to-date information on carrying a concealed handgun, visit the Attorney General's web site at www.OhioAttorneyGeneral.gov

Contents

Introduction 1

Training and Educational Requirements 2
- Training and Competency Certification
- Temporary Emergency License
- Minimum Educational Requirements

The Application Process 6
- Sheriff's Criteria for Issuing the License
- Residency
- Criminal Record
- Mental Competency
- Protection Orders
- License Denials and Appeals
- License Renewals and Competency Recertification

Duties that Accompany Holding a Concealed Handgun License.....12
- Identification Required
- Forbidden Carry Zones
- Transporting in Motor Vehicles
- Traffic Stops and Other Law Enforcement Encounters
- Private Property and the Workplace
- Signage
- Concealed Carry by Law Enforcement
- Reciprocity

Deadly Force 19
- Criminal Issues
- Civil Liability
- Self-Defense
- Castle Doctrine
- Defense of Others
- Conclusion: Self-Defense Issues
- Defense of Property
- Conclusion

Dispute Resolution 25
- Basic Forms of Dispute Resolution

Advantages of Alternative Dispute Resolution
The Ohio Commission on Dispute Resolution and Conflict Management
Conclusion

Index **28**

Introduction

As required by Ohio law, this publication broadly discusses several different areas of firearms law. This is neither a formal nor informal opinion of the Attorney General; rather, it is a summary of prevailing firearms and self-defense laws and may be updated without notice. It is not intended to be a substitute for the advice of a lawyer or for common sense. This publication is informational in nature and cannot cover all possible scenarios regarding carrying of concealed handguns. For the most recent edition covering the most current law, consult the Attorney General's Web site at: **www.OhioAttorneyGeneral.gov.**

There are many areas of Ohio law that impact your decision to be a concealed carry licensee and you should consult an attorney for specific information. The Ohio Attorney General cannot provide legal advice to anyone other than state agencies, officers, and employees. In this publication, sections of the Ohio Revised Code — the laws passed by the General Assembly — are referenced with the abbreviation "R.C." followed by the relevant code number. The Revised Code is available online and may also be found at law libraries and some public libraries. Citizens are encouraged to read the law for themselves using this book as a guide.

Training and Educational Requirements

Training and Competency Certification
Before you obtain a license to carry a concealed handgun, you will need proof of your competency certification. Competency can be established by providing one of the following:

- A certificate of completion of a firearms safety course that was offered by or under the auspices of the National Rifle Association (NRA) containing certain minimum educational requirements (See the section of this publication titled, "Minimum Educational Requirements" for additional information about the specific areas that must be covered in training.); or

- A certificate of completion of a class that was open to the public that used instructors approved by the National Rifle Association or Ohio Peace Officer Training Commission (OPOTC), or approved instructors of another state and was offered under the authority of a law enforcement agency of Ohio or another state, a college, or a firearms training school that contains the minimum educational requirements; or

- A certificate of completion of a state, county, municipal, or Ohio Department of Natural Resources (ODNR) peace officer training school that is approved by the executive director of OPOTC which complies with the law's training requirements and contains the minimum educational requirements; or

- A document that shows the applicant is an active or reserve member of the armed forces, or was honorably discharged within the past six years, or is a retired highway patrol trooper, or is a retired peace officer or federal law enforcement officer and who, through the position, acquired experience with handguns or other firearms that was equivalent to the minimum educational requirements; or

- A certificate of completion of a class not otherwise described in this publication that was conducted by an instructor who was certified by an official or entity of Ohio, another state, the United States government, or the NRA that complies with the minimum educational requirements; or

- An affidavit from a qualified instructor that attests to the applicant's completion of a course that satisfied the minimum educational requirements.

Statutory Reference(s): The types of competency certifications are described in R.C. 2923.125(B)(3)(a) - (f).

Temporary Emergency License
The law allows for the issuance of an emergency license under extraordinary circumstances. The law states that upon receipt of evidence of imminent danger; a sworn affidavit; an application fee of not more than $30; and a set of applicant fingerprints, a license will be issued.

The sheriff must immediately conduct a criminal records check on the applicant. The sheriff must determine if the applicant is not prohibited from having a license, and then immediately issue the license.

1. Evidence of imminent danger must take two forms:

    a. A sworn statement by the applicant that states the person has reasonable cause to fear a criminal attack upon himself or a member of his family such as would justify a prudent person in going armed; or

    b. A written document from a government entity or public official describing facts that give the person reasonable cause to fear such a criminal attack. Such documents may include, but are not limited to, temporary protection orders, civil protection orders, a protection order of another state, a court order and any report filed with or made by a law enforcement agency or prosecutor.

2. The sworn affidavit must attest that the applicant is a legal resident of the United States, at least 21 years of age, not a fugitive from justice, is not under indictment or charged with a crime, and has not been convicted of disqualifying crimes listed in R.C. 2923.125(D)(1) and discussed under the "Application Process" section.

If the applicant has been convicted or pleaded guilty to a disqualifying offense and the court has ordered the sealing of the records of that

offense, that offense(s) shall not be relevant for purposes of the sworn affidavit.

The temporary emergency license lasts for 90 days and may be renewed only once every four years. If you wish to have your license last longer, you must apply for the license through the normal process within the 90 days.

Statutory References: R.C. 2923.1213 allows sheriffs to issue emergency licenses when there is evidence of imminent danger to the applicant. R.C. 2923.1213 (B) (3) does not allow sheriffs to consider court ordered sealed records for purposes of the sworn affidavit.

Minimum Educational Requirements

The Attorney General does not endorse any particular form of training or instructor. However, a list of Ohio Peace Officer Training Commission-certified instructors who wish to teach classes to the general public is available from the Attorney General's Web site at www.OhioAttorneyGeneral.gov. County sheriffs may also have a list of certified instructors who have provided contact information to the sheriff.

The law sets out minimum educational requirements that are a component of the various forms of competency certification as set forth on page 2. The total time required for training is 12 hours: 10 hours of instruction and another two hours of experience shooting a handgun.

The law requires at least 10 hours of certified training in the following matters:

- The ability to name, explain, and demonstrate the rules for safe handling of a handgun and proper storage practices for handguns and ammunition;
- The ability to demonstrate and explain how to handle ammunition in a safe manner;
- The ability to demonstrate the knowledge, skills and attitude necessary to shoot a handgun in a safe manner;
- Gun-handling training.

Additionally, you must have two hours of practical training including range time and live-fire experience. The applicant must also complete an examination that tests his or her competency. The test must include a written section on the ability to name and explain the rules for the safe handling of a handgun and proper storage practices for handguns and ammunition. Additionally, the exam must include a physical demonstration of competency on handgun usage and rules for safe handling and storage of a handgun, and an examination requiring the physical demonstration of the attitude necessary to shoot a handgun in a safe manner.

As part of the training, applicants must also receive and certify that they have reviewed a copy of this publication.

As an advisory to consumers, the Attorney General recommends anyone contemplating private handgun training take the following minimum steps before paying for any form of training:

- Verify the person teaching the class is qualified to teach.
- Confirm the instructor knows the requirements of the law.
- Be certain the instructor will provide you with this publication.
- Verify whether a refund or additional training may be available if a county sheriff determines the course was incomplete when you apply.

Statutory Reference(s): R.C. 2923.125(G)(1) requires that all applicants be given a copy of this publication by their trainer.
R.C. 2923.125(G)(1)(a) sets out the minimum educational requirements necessary to receive competency certification.
R.C. 2923.125(G)(1)(b) describes the minimum amount of range and live-fire experience required to receive competency certification.
R.C. 2923.125(G)(2) requires that applicants take and pass a written examination.

The Application Process

To begin the application process, you must apply to the sheriff in the county where you reside or an adjoining county. Before you apply with your local sheriff, call ahead to determine the times applications are accepted and confirm what documentation may be necessary.

The sheriff must accept applications and supporting documents for temporary emergency licenses during normal business hours. The sheriff must provide application forms and accept license applications and supporting documents for regular licenses at least 15 hours each week. The sheriff shall post a notice of the hours during which the sheriff is available to accept applications or to provide information about the licensing process.

The sheriff must provide you with an application form and make this publication available at no charge. You must pay a fee which will vary depending on the background check the sheriff must conduct. The minimum fee, however, for a background check and license is $55. You must provide evidence of your competency certification as described above, and certify that you have read this publication. Applicants must also submit their fingerprints necessary to conduct the background check.

The applicant must state whether he or she has a concealed handgun license that is currently suspended and whether or not he or she has previously applied for a concealed handgun license. If the applicant has previously applied for a license, the applicant must provide the name of the county in which the application was made.

Licenses issued on or after March 14, 2007, expire 5 years after the issue date. Licenses issued before March 14, 2007, expire 4 years after the issue date. All regular licenses renewed on or after March 14, 2007, expire 5 years after the renewed license was issued.

Statutory Reference(s): Under R.C. 2923.125(A), the sheriff must provide you with an application and make this publication available at no charge. R.C. 2923.125(B)(4) requires that applicants certify that they have read this publication.
R.C. 2923.125(B)(1) states applicants must pay an application fee that will vary based on the type of background check required and sets the

minimum fee at $55.
R.C. 2923.125(B)(2) requires applicants to provide a color photograph taken within 30 days of the application date. However, some sheriffs' offices may take these photographs themselves.
R.C. 2923.125(B)(3) requires that applicants submit proof of competency at the time of the application.R.C. 2923.125(B(5) requires applicants submit to fingerprinting necessary to conduct a background check.

Sheriff's Criteria for Issuing the License

Residency
You must be a legal resident of the United States and an Ohio resident for 45 days before you apply for your license. You must be a resident of the county (or adjoining county) where you apply for at least 30 days. You must also be at least 21 years of age and not a fugitive from justice.

Residency for members of the armed forces.
You are considered an Ohio resident for purposes of obtaining and renewing a license to carry a concealed handgun if you are absent from the country, Ohio or an Ohio county while complying with military or naval orders as an active or reserve member of the armed forces of the United States and, if prior to leaving this state in compliance with those orders, you were legally living in the United States and were a resident of this state, you, solely by reason of that absence, shall not be considered to have lost your status as living in the United States or your residence in this state or in the county in which you were a resident prior to leaving this state in compliance with those orders, without regard to whether or not you intend to return to this state or to that county, shall not be considered to have acquired a residence in any other state, and shall not be considered to have become a resident of any other state.

If you are present in this state in compliance with military or naval orders as an active or reserve member of the armed forces of the United States for at least forty-five days, you are considered to have been a resident of this state for that period of at least forty-five days, and, if you are present in a county of this state in compliance with military or naval orders as an active or reserve member of the armed forces of the United States for at least thirty days, you shall be considered to have been a resident of that county for that period of at least thirty days.

Statutory Reference: 2923.125(D)(1)(i)-(ii) allows persons deployed in the military to obtain Ohio concealed carry licenses under certain conditions.

Criminal Record
Prior to obtaining your license, you must provide the sheriff with complete information about your background. There are many

criminal offenses that bar you from obtaining your license. There are many laws and conditions that prohibit you from owning a handgun. If you have questions about specifics you should consult an attorney.

The law states that you must not be under indictment, charged or convicted of a felony, a felony that involves the trafficking in drugs or similarly charged with a misdemeanor offense of violence or negligent assault. You may not obtain your license if you have been charged with falsification of a concealed handgun license.

In addition, you must not have been convicted, pleaded guilty, or been adjudicated as delinquent in connection with a crime that involves the illegal use, sale, possession, administration, distribution, or trafficking of a drug of abuse. You cannot have been convicted, pleaded guilty or been adjudicated delinquent for assaulting a peace officer. You must not, within three years of your application, have been convicted, pleaded guilty or been adjudicated delinquent in connection with a misdemeanor offense of violence against a peace officer.

You must not have been convicted, pleaded guilty or been adjudicated delinquent in connection with two or more assaults or negligent assaults within five years of your application. You must not have been convicted, pleaded guilty or adjudicated as delinquent in connection with resisting arrest within 10 years of your application. If you are charged with an offense during the application process, the sheriff can suspend your application until your case is resolved.

The sheriff shall not consider the conviction, guilty plea, or adjudication of an applicant's sealed records even if those sealed offenses would otherwise disqualify an applicant. If you have questions about sealed criminal records, consult an attorney.

Mental Competency

The law states that you must not have been adjudicated as a mental defective, been committed to any mental institution, be under a current adjudication of incompetence, have been found by a court to be mentally ill subject to hospitalization by court order, and not be an involuntary patient other than one who is a patient only for purposes of observation.

Protection Orders
You must not be subject to a civil protection order or a temporary protection order of an Ohio court or a similar protection order issued by another state. For additional information on civil and temporary protection orders, consult an attorney.

As long as you meet the law's requirements, the sheriff must issue a concealed handgun license within 45 days of receiving your properly completed application. The license lasts for five years.

Statutory Reference(s): The criminal offenses that bar a citizen from receiving a concealed carry license are listed in R.C. 2923.125 (D) (1) (a) – (h).
R.C. 2923.125 (D) (3) allows a sheriff to suspend the processing of an application if a pending criminal case is outstanding against an applicant.
R.C. 2923.125 (D) (5) prohibits sheriffs from considering the conviction, guilty plea, or adjudication of an applicant's sealed records.
R.C. 2923.125 (D) (1) (i) – (j) lists the mental competency and protection order issues that can cause the denial of an application.
R.C. 2923.13 lists the disabilities that prohibit you from having a firearm.

License Denials and Appeals
If the sheriff denies your license, he must inform you of the grounds for denial in writing. If the denial was the result of a criminal records check and you wish to appeal the decision, you may appeal the denial through an in-house procedure with the sheriff or through the Ohio Bureau of Criminal Identification and Investigation to resolve the problem. The sheriff's denial of a temporary emergency license must also be in writing and can be appealed.

Statutory Reference(s): If your application is denied, the sheriff must inform you of the grounds for denial in writing under R.C. 2923.125(D)(2)(b).
R.C. 2923.127 requires sheriffs to set up an appeals process for applicants who wish to contest the denial.

License Renewals and Competency Recertification
Concealed carry licenses issued before March 14, 2007 expire four years after issuance. Licenses issued or renewed after thate date expire five years after the date of issuance or renewal.

After October 17, 2009, if you wish to renew your license, you may do so 90 days before the license expires. You should renew as early as possible. You must file a renewal application with the sheriff's office, certify that you have read this booklet and pay a nonrefundable fee. A printed copy is not needed; you may read the online version at **www.OhioAttorneyGeneral.gov/CCWManual**.

In order to renew your license for the first time, you must submit proof of competency certification. Proof of certification make take either of the following forms:
1. A previously issued Ohio concealed carry license. The license may be either expired or currently valid.
2. A competency certificate from your instructor. There is no longer a time limit from the day you completed your class to the time of your first renewal. Any certificate will

If you have previously renewed your license and are renewing for a second time, you need to present proof of renewed competency certification. The renewed competency certification must attest that you are range competent. To obtain a renewed competency certification, you do not need to attend the entire course, class or program that you initially took to obtain your license. The renewed competency certification must be dated and signed by an instructor. It must attest that you are range competent.

Statutory Reference: 2923.125(F) and (G) describe the procedure and necessary materials to renew a concealed carry license.

Duties that Accompany Holding a Concealed Handgun License

Do not Take Your Handgun With You When You Apply For Your License At Your Local Sheriff's Office.
The ability to have a firearm carries with it certain restrictions and responsibilities, many of which are regulated by state and federal laws.

The explanation of laws regulating carrying a handgun found within this publication is not an exhaustive list. If you have questions, consult an attorney.

Identification Required
You must carry another piece of valid government identification in addition to the handgun license.

Forbidden Carry Zones
The law sets forth several places where your license does not allow you to carry a handgun. Under the law, you may not carry a concealed handgun into the following places:

- Police stations
- Sheriffs' offices
- Highway Patrol posts.
- Premises controlled by the Ohio Bureau of Criminal Identification and Investigation.
- Correctional institutions or other detention facilities
- Airport terminals or commercial airplanes.
- Institutions for the care of mentally ill persons.
- Courthouses or buildings in which a courtroom is located.
- Universities, unless locked in a motor vehicle or in the process of being locked in a motor vehicle.
- Places of worship, unless the place of worship permits otherwise.
- Child day-care centers.
- Licensed D-Liquor Permit premises in which any person is consuming liquor.

  Concealed firearms are banned in premises for which a D permit has been issued or in an open air arena for which a permit of that nature has been issued. There are some exceptions to this prohibition. The prohibition does not apply to principal holder of D permit as long as principal holder is not consuming liquor.

The prohibition does not apply to an agent or employee of the principal holder who is also a peace officer who is also off duty. Possession of a concealed firearm is allowed in a retail store with a D-6 or D-8 permit as long as concealed carry license holder is not consuming liquor. Class D permits are generally issued to an establishment that sells alcohol for consumption on the premises. In any event, be certain of the type of permit and whether liquor is being consumed before you enter with a concealed handgun.

- Government facilities that are not used primarily as a shelter, restroom, parking facility for motor vehicles, or rest facility and is not a courthouse or a building or structure in which a courtroom is located.
- School safety zones.

  A "school safety zone" includes a school, school building, school premises, school activity, and school bus. For purposes of this statute, a school includes everything up to the property boundary.

  The law generally forbids the carrying of a handgun in a school safety zone unless all of the following apply:
  - You do not enter a school building, premises or activity; and
  - You have a concealed carry license or temporary emergency license; and
  - You are not otherwise in one of the forbidden places listed above and detailed in R.C. 2923.126 (B); or
  - You are a driver or passenger in a motor vehicle immediately in the process of picking up or dropping off a child, and you are not otherwise in violation of the laws governing transportation of firearms in motor vehicles.

Transporting in Motor Vehicles

The transportation of loaded, concealed handguns in motor vehicles is permitted, but strict obligations are imposed by the law to protect you and law enforcement. These obligations apply to drivers and occupants. These obligations do not apply if you are storing a firearm for any lawful purpose and it is not on your person or you are lawfully storing or possessing a firearm in your home.

You may not have a loaded handgun in the vehicle if you are under the influence of drugs or alcohol. If you have a concealed carry permit, you may not transport a loaded, concealed handgun in a vehicle unless it is carried in one of the following ways:

- The loaded handgun is in a holster secured on the person. Ohio law previously required carrying firearms in a holster in plain sight. **The "plain sight" provision has been removed from the law.**
- The loaded handgun is in a closed case, bag, box, or other container that is in plain sight and that has a lid, a cover, or a closing mechanism with a zipper, snap, or buckle, which lid, cover or closing mechanism must be opened for a person to gain access to the handgun, or
- The loaded handgun is securely encased by being stored in a closed, glove compartment or console, or in a case that is locked.

Motorcycles fall under the definition of motor vehicles. Thus, the same requirements apply to licensees who carry a handgun while on a motorcycle.

Traffic Stops and Other Law Enforcement Encounters
If a person is stopped for a law enforcement purpose and if the person is carrying a concealed handgun as a CCW licensee, whether in a motor vehicle or not, the person shall inform the law enforcement officer that the person is carrying a concealed handgun, keep his or her hands in plain sight at all times and not touch the concealed handgun, unless in accordance with directions given by any law enforcement officer.

Violating this section of law is a first degree misdemeanor, and in addition to any other penalty handed down by a court, shall result in the suspension of the person's concealed handgun license for one year.

> **NOTE:** So far, the Ohio Supreme Court has not defined the term "plain sight" precisely in the context of carrying a concealed handgun. However, in other contexts, courts have generally held that the term "plain sight" is a common sense term that means clearly visible or unobstructed. Plain sight applies to your hands and other objects.

If a person is stopped for a law enforcement purpose and if the person is carrying a concealed handgun as a CCW licensee, whether in a motor vehicle or not, the person shall not have or attempt to have any contact with the handgun, unless in accordance with directions given by a law enforcement officer. Violating this law is a felony.

If a person is stopped for a law enforcement purpose and if the person is carrying a concealed handgun as a CCW licensee, whether in a motor vehicle or not, the person shall not knowingly disregard or fail to comply with any lawful order given by any law enforcement officer.

Violating this law is a first degree misdemeanor and may result in the suspension of the person's concealed handgun license for two years. However, if at the time of the stop the law enforcement officer or an employee of a motor carrier enforcement unit who made the stop had actual knowledge that the licensee has had a CCW license, then the person's CCW license shall not be suspended for a violation of 2923.16 (E) (3). The CCW licensee's violation will be considered a minor misdemeanor.

If the CCW licensee surrenders the firearm, then the following applies:

- If the firearm is not returned at the completion of the stop, the law enforcement officer is required to return the firearm in " the condition it was in when it was seized."
- If a court orders the firearm's return and the firearm has not been returned to the licensee, the CCW licensee can claim reasonable costs and attorney fees for the loss and the cost of claiming the firearm.

WARNING:
If you are planning on carrying a concealed handgun while driving:

Have your concealed carry license and another piece of valid government identification in your possession.

Make sure the handgun is:

- In a holster secured on your person, or
- In a closed case, bag, box, or other container that is in plain sight and has a closing mechanism such as a zipper, snap or buckle, or
- Securely encased by being stored in a closed, glove compartment or vehicle console, or
- Locked in a case.

If you are pulled over and you are carrying a concealed handgun remember the following:

- Before the officer approaches, roll down your window and place your hands in plain view on the steering wheel.
- Calmly tell the officer that you have a license to carry a concealed handgun and that you have a handgun with you. Ask if the officer has particular instructions concerning the handgun.
- Do not touch or attempt to touch your handgun unless specifically told to by the officer.
- Do not exit your vehicle unless specifically told to by the officer.
- Comply with all lawful orders given by the officer.

If you are a licensee and are not carrying a concealed handgun, this section does not apply to you.

In addition to the concealed carry prohibitions detailed above, Ohio has strict laws concerning firearms in a vehicle. If you DO NOT have a concealed handgun license, you may not transport a loaded handgun in any manner where it is accessible to anyone inside the vehicle without leaving the vehicle. If you DO NOT have a license, you may not transport a firearm in a vehicle unless it is unloaded and carried in one of the following ways:

- In a closed package, box or case;
- In a compartment that can be reached only by leaving the vehicle;
- In plain sight and secured in a rack or holder made for that purpose; or
- If it is a firearm at least twenty four inches in overall length and if the barrel is at least eighteen inches in length in plain sight with the action open or the handgun stripped, or if the firearm is of a type in which the action will not stay open or cannot easily be stripped, in plain sight.

Statutory Reference (s) R.C. 2923.16 (E) governs how licensees may transport loaded concealed handguns in motor vehicles.
R.C. 2923.16 (B) – (C) governs how firearms must be otherwise transported in a vehicle

Private Property and the Workplace

Under the law, private employers may, but are not required to, prohibit the presence of firearms on their property or motor vehicles owned by the employer. You should make yourself aware of your employer's policies before you go to work with a handgun. In addition, the owner or person in control of private land or premises or person leasing land or premises from the government may post a sign in a conspicuous location that prohibits persons from carrying firearms or concealed handguns.

Ohio law provides that a person who knowingly violates a posted prohibition of a parking lot or other parking facility is not guilty of criminal trespass but is liable for a civil cause of action for trespass. Furthermore, a landlord may not prohibit or restrict a tenant with a concealed carry license from lawfully carrying or possessing a handgun on residential premises.

Signage
The law does not say precisely what language must be on the sign. At a minimum, signs must be conspicuous and inform people that firearms and/or concealed handguns are prohibited. However, the law suggests that the prohibited locations post a sign that substantially says the following:

> *Unless otherwise authorized by law, pursuant to the Ohio Revised Code, no person shall knowingly possess, have under the person's control, convey, or attempt to convey a deadly handgun or dangerous ordnance onto these premises.*

An example of a standard warning sign approved for use on state buildings appears below. If you see this sign, it means that you cannot bring your concealed handgun inside. Businesses and persons wishing to post such signs are strongly advised to consult their legal counsel for language, style, format and placement.

The sign is available to download from the Attorney General's Web site at www.OhioAttorneyGeneral.gov at no charge.

Example of a Standard Warning Sign

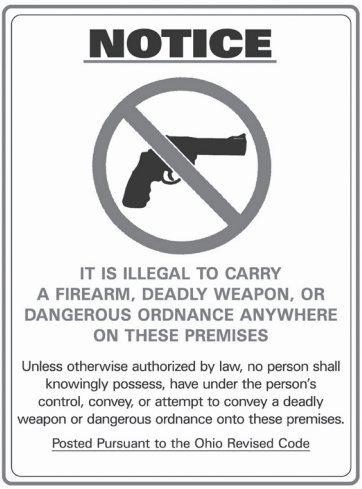

Statutory Reference(s): R.C. 2923.126(C) allows private employers to prohibit the presence of firearms on their property or in motor vehicles owned by the employer.
R.C. 2923.126(C)(3) allows the owner or person in control of private land to post a sign in a conspicuous place that prohibits persons from carrying concealed firearms on that property.

Concealed Carry by Law Enforcement
Federal law (HR 218) permits active and retired law enforcement officers, under specific circumstances, to carry a concealed firearm. This publication does not address issues related to HR 218. If you are an active or retired law enforcement officer and have questions about HR 218, consult an attorney.

Reciprocity
Ohio has agreements with other states to recognize one another's concealed handgun licenses. Consult the Attorney General's web site for the most recent list of agreements. Be aware the laws of the other state apply to you when you are in that state.

Open Carry
Ohio's concealed carry laws do not regulate "open" carry of firearms. If you openly carry, use caution. The open carry of firearms is a legal activity in Ohio.

Deadly Force

Introduction
Ohio law specifically sets forth that a handgun is a deadly weapon capable of causing death. The license to carry a concealed handgun comes with the responsibility of being familiar with the law regarding use of deadly force. This publication is designed to provide general information only. It is not to be used as authority on legal issues, or as advice to address specific situations.

In Ohio, deadly force can be used only to prevent serious bodily harm or death. Deadly force can never be used to protect property only. Depending on the specific facts and circumstances of the situation, use of deadly force may lead to criminal charges and/or civil liability.

Criminal Issues
If law enforcement and prosecutors determine that a person's use of deadly force is not justified, criminal charges may be pursued. In a situation where the victim is injured by the conduct of a person using a handgun, the licensee can be charged with assault crimes including, but not limited to, felonious assault, aggravated assault, or attempted murder. Where the victim is killed as a result of a person's use of a firearm, he or she can be charged with homicide crimes, such as reckless homicide, voluntary manslaughter, murder or aggravated murder. (This list does not include all crimes that may apply.)
If the accused person is convicted, he or she will be sentenced to a term of incarceration by a judge, according to the law.

Statutory Reference(s): Title 29 of the Ohio Revised Code defines the crimes that could be charged when the use of deadly force is not justified.

Civil Liability
Even if the situation does not lead to criminal charges or result in a criminal conviction, the licensee may still face civil liability. The victim or his survivors could sue the licensee for the harm from the licensee's use of deadly force. A "wrongful death" lawsuit or "tort action" is a common legal action for money damages. A civil action does not involve a criminal penalty such as incarceration but both a criminal and civil case can be brought based on the same incident.

In any civil case, the victim or his survivors must prove it is more probable than not that the licensee's use of force was inappropriate or excessive and it caused the victim's injuries or death. If this is proven, the victim or his survivors may be entitled to recover money from the licensee as punishment and/or compensation.

The law requires the force used be reasonable and necessary to prevent the danger. So even if the victim was wrong and caused the situation, if the force was inappropriate or excessive for the particular situation, the defendant risks criminal and/or civil punishment.

Although self-defense is an affirmative defense a licensee may assert against civil liability, the licensee might still be required to compensate the victim if the force used was excessive and unnecessary.

Self-Defense

Depending on the specific facts of the situation, an accused person may claim that use of deadly force was justified to excuse his or her actions, which would otherwise be a crime. Self-defense or the defense of another is an affirmative defense that an accused may assert against a criminal charge for an assault or homicide offense.

The term "affirmative defense" means the accused, not the prosecutor, must prove by a preponderance of the evidence that he acted in self-defense or in defense of another. In other words, the defendant must prove that it is more probable than not that his use of deadly force was necessary due to the circumstances of the situation.

Whether this affirmative defense applies to the situation or whether it will likely succeed against criminal charges depends heavily on the specific facts and circumstances of each situation. The Ohio Supreme Court has explained that a defendant must prove three conditions to establish that he acted in defense of himself or another.

Condition 1: Defendant Is Not At Fault

First, the defendant must prove that he was not at fault for creating the situation. The defendant cannot be the first aggressor or initiator. However, in proving the victim's fault, a defendant cannot point to other unrelated situations where the victim was the aggressor. Remember, the focus is on the specific facts of the situation at hand.

If you escalate a confrontation by throwing the first punch, attacking, or drawing your handgun, you are the aggressor. Most likely in this situation, you cannot legitimately claim self-defense nor would you likely succeed in proving your affirmative defense.

Condition 2: Reasonable and Honest Belief of Danger
Second, the defendant must prove that, at the time, he had a real belief that he was in immediate danger of death or great bodily harm and that his use of deadly force was the only way to escape that danger. Bear in mind that deadly force may only be used to protect against serious bodily harm or death. **The key word is serious.**

In deciding whether the bodily harm was serious, the judge or jury can consider how the victim attacked the defendant, any weapon the victim had, and how he used it against the defendant. Minor bruises or bumps from a scuffle probably do not meet the legal definition of "serious." In court cases, rape has been determined to be serious bodily harm, as has being attacked with scissors. Serious bodily harm may also result from being struck with an object that can cause damage, such as a baseball bat or a wooden club.

Important is the defendant's belief that he is in immediate serious danger. The defendant's belief must be reasonable, it cannot be purely speculative. In deciding if the belief was reasonable and honest, the judge or jury will envision themselves standing in the defendant's shoes and consider his physical characteristics, emotional state, mental status, knowledge, the victim's actions, words and all other facts regarding the encounter. The victim must have acted in a threatening manner. Words alone, regardless of how abusive or provoking, or threats of future harm ("I'm going to kill you tomorrow") do not justify the use of deadly force.

Condition 3: Duty to Retreat
A defendant must show that he did not have a duty to retreat or avoid the danger. A person must retreat or avoid danger by leaving or voicing his intention to leave and ending his participation in the confrontation. If the person retreats and the other continues to fight, the person who left the confrontation may be later justified in using deadly force when he can prove all three conditions of self-defense existed. You should always try to retreat from a confrontation before using deadly force if retreating does not endanger yourself or others.

If the person can escape danger by means such as leaving or using less than deadly force, he must use those means. If you have no means to escape the other person's attack and you reasonably, honestly believe that you are about to be killed or receive serious bodily harm, you may be able to use deadly force if that is the only way for you to escape that danger.

Castle Doctrine

Under certain changes enacted in 2008, a person does not have a duty to retreat from the residence that they lawfully occupy before using force in self-defense or defense of another. Additionally, there is no duty to retreat if the person is lawfully in that person's vehicle or lawfully is an occupant in a vehicle owned by an immediate family member of that person. However, being a lawful occupant of a residence or vehicle is not a license to use deadly force against an attacker. The person who is attacked, without fault of his own, may use deadly force only if he reasonably and honestly believed that deadly force was necessary to prevent serious bodily harm or death. If the person does not have this belief, he should not use deadly force. Again, if it does not put your life or the life of others in danger, you should withdraw from the confrontation if it is safe for you to do so.

The law presumes you to have acted in self-defense or defense of another when using deadly force if the victim had unlawfully and without privilege entered or was in the process of entering the residence or vehicle you occupy. The presumption does not apply if the defendant was unlawfully in that residence or vehicle. The presumption does not apply if the victim had a right to be in, or was a lawful resident, of the residence or vehicle.

The presumption of self-defense is a rebuttable presumption. The term "rebuttable presumption" means the prosecutor, and not the defendant, carries the burden of producing evidence contrary to the facts that the law presumes. However, a rebuttable presumption does not relieve the defendant of the burden of proof. If the prosecutor provides sufficient evidence to prove that the defendant created the confrontation or that the use of deadly force was not reasonably necessary to prevent death or great bodily harm then the presumption of self-defense no longer exists.

Statutory Reference(s): R.C. 2901.05 sets forth the rebuttable presumption R.C. 2901.09(B) establishes that there is no duty to retreat before using force if a person is a lawful occupant of that person's vehicle or a lawful occupant in a vehicle owned by an immediate family member.

Defense of Others

A person may defend another only if the protected person would have had the right to use deadly force in self-defense themselves. Under Ohio law, a person may defend family members, friends or strangers. However, just as if he were protecting himself, a person cannot use any more force than is reasonable and necessary to prevent the harm threatened.

A defendant, who claims he used deadly force to protect another, has to prove that he reasonably and honestly believed that the person he protected was in immediate danger of serious bodily harm or death and that deadly force was the only way to protect the person from that danger. Furthermore, the defendant must also show that the protected person was not at fault for creating the situation and did not have a duty to leave or avoid the situation.

WARNING: The law specifically discourages citizens from taking matters into their own hands and acting as law enforcement. This is true even if the person thinks he is performing a good deed by protecting someone or helping law enforcement. The Ohio Supreme Court has ruled that a person risks criminal charges if he interferes in a struggle and protects the person who was at fault, even if he mistakenly believed that person did not create the situation.

In other words, if you misinterpret a situation and interfere, you may face criminal charges because your use of deadly force is not justified. If you do not know all the facts and interfere, you will not be justified to use force. It does not matter that you mistakenly believed another was in danger and not at fault.

Of greater concern than risking criminal charges is the fact that you may be putting yourself and others in danger. If you use your handgun to interfere in a situation, and an officer arrives on the scene, the officer will not be able to tell if you are the criminal or if you are the Good Samaritan.

Ohio law does not encourage vigilantism. A license to carry a concealed handgun does not deputize you as a law enforcement agent. Officers are trained to protect members of the community, handle all types of situations, and enforce the law. Do not allow the license to carry a concealed handgun give you a false sense of security or empowerment. Let law enforcement officers do their job. If you want to be a Good Samaritan, call the police.

Conclusion: Self-Defense Issues
If the defendant fails to prove any one of the three conditions for self defense or defense of another, he fails to justify his use of deadly force. If the presumptions of deadly force in the home or vehicle are removed and the defendant is unable to prove that he did not create the situation or that the use of deadly force was reasonably necessary, he fails to justify his use of deadly force. Under either condition, if convicted, an individual will be sentenced accordingly.

Defense of Property
There must be immediate threat of serious bodily harm or death in order to use deadly force. Protecting property alone does not allow for the use of deadly force. A property owner may use reasonable, but never deadly force, when he honestly believes that the force will protect his property from harm.

If a person's property is being attacked or threatened, he may not use deadly force unless he reasonably believes it was the only way to protect himself or another from being killed or receiving serious bodily harm. Deadly force can never be used solely to protect property no matter where the threat to the property occurs.

Conclusion

A license to carry a concealed handgun does not bring with it the automatic right to use deadly force. The appropriateness of using any force depends on the specific facts of each and every situation.

Dispute Resolution

Introduction

Because of the serious consequences inherent with the use of deadly force, it should always be a last option for resolving a problem. If you have a problem, you should consider other ways of resolving the problem first. Ohioans have many different options for settling disputes outside the traditional judicial arena in a quick, equitable, and most importantly, legal manner, that do not require force.

Broadly termed "alternative dispute resolution" (ADR), these methods recognize that for many people, the judicial process is time consuming and cumbersome, possibly expensive, and often confusing. Instead of giving citizens the choice of taking a matter to court or into their own hands for satisfaction, alternative dispute resolution offers a third way that has been overwhelmingly shown to be successful in ending disputes of all types. These choices include mediation, arbitration, conciliation and negotiation.

Basic Forms of Dispute Resolution

Alternative dispute resolution spans a spectrum of methods, each more formalized and binding than the last.

The most obvious form of alternative dispute resolution is avoidance. This "like it or lump it" response to a dispute is often the hardest to accept as it means surrendering one's own choice in favor of someone else's. Depending on the issue, avoidance may not be possible.

If one cannot avoid a conflict, discussion is often the next best way to solve a dispute. Direct talks often result in an acceptable solution that ends in conciliation and defused tension. Sometimes, however, the best way to solve a conflict using discussion is to have negotiation through agents. In simple conflicts, these agents can be friends, relatives, a counselor or religious advisor. Other times, agents can include formal, recognized officials such as labor or management representatives, or attorneys.

Formal alternative dispute resolution often involves a neutral third party whose advice and decision may have binding effect on the participants. The least binding form of third-party intervention is

involvement of an ombudsman.

An ombudsman is most frequently found within a company or large organization and may be empowered to facilitate consumer complaints or employee disputes. While compensated by the organization, the ombudsman is normally answerable only to the most upper-level management or to the board of directors and is engaged to be as neutral and fair as possible. An ombudsman is generally empowered to talk to anyone, uncover facts, and make a recommendation to senior management within an organization. Some large American companies who employ ombudsmen for employee disputes include FedEx, IBM and McDonald's Corporation.

Another, more involved, form of negotiated settlement is mediation. This method of ADR is appropriate when the various sides wish to preserve a relationship or terminate it with the least amount of ill will. Mediation involves negotiation, where a neutral mediator guides the process. Mediation does not force compromise, and parties are expected to reach an agreement only if they are convinced such an agreement is reasonable.
When negotiations fail, the parties can opt to try arbitration, where a neutral arbitrator is given authority by the parties to impose a settlement after each side presents its "case." The arbitrator renders a decision which can be binding or non-binding upon the parties. Non-binding decisions may provide a guide for the parties to reach a settlement or to give insight into the possible outcome of more traditional litigation. Many contracts require signers to choose arbitration as a prerequisite to a lawsuit.

Should arbitration not be an option, or if the non-binding result does not lead to a settlement, the parties can still engage in alternatives to the traditional courtroom trial. These alternatives almost always require legal counsel and are more complex than the extra-judicial remedies listed here.

Advantages of Alternative Dispute Resolution
Besides the faster timeline and usually lower cost, alternative dispute resolution has a number of strengths that may make it a better choice in some disagreements. ADR allows for a much broader range of equitable solutions, provides for more direct participation by the parties in the settlement of their disputes, increases the likelihood of uncovering the underlying problems that led to the disagreement,

and has a greater chance of creating agreements that both sides will adhere to. By reaching a settlement through consensus rather than by judicial decision, participants in ADR have told researchers that they feel more empowered, their emotional concerns as well as their legal or financial positions had been acknowledged and, their belief in the legal system had improved.

The Ohio Commission on Dispute Resolution and Conflict Management

The state of Ohio, recognizing ADR has an important role in conflict resolution, created the Ohio Commission on Dispute Resolution and Conflict Management to promote and strengthen the state's ADR policy. Established in 1989, the Commission provides Ohioans with forums, processes, and techniques for resolving disputes. The Commission provides dispute resolution and conflict management training, consultation and technical assistance in designing dispute resolution programs, and facilitation and mediation services.

The information contained in this section should not be construed as legal advice. It is not an endorsement of alternative dispute resolution over traditional forms of legal remedies, and readers are cautioned that any questions about their rights should be discussed with an attorney prior to engaging in legal action of any type.

For more information on Alternative Dispute Resolution, contact:

Ohio Commission on Dispute Resolution
and Conflict Management
Riffe Center
77 S. High Street, 24th Floor
Columbus, OH 43215-6108
Phone: (614) 752-9595
Fax: (614) 752-9682
http://www.disputeresolution.ohio.gov/

Conclusion

This pamphlet is intended to provide you with information regarding Ohio's concealed carry law. The Office of the Attorney General will continue to work closely with the legislature and law enforcement with a common goal of helping to ensure a safe, efficient licensing process for Ohioans.

Index

a
affidavit 3
affirmative defense 20
airport 11
alcohol 12, 13
application fee 7
application process 3, 6
arbitration 26, 27
armed forces 2

b
background check 6
belief of danger 21

c
castle doctrine 22
competency 2
conciliation 26
correctional institutions 11
courthouses 11
criminal record 8

d
day-care 11
deadly force 19
deadly weapon 19
defense of others 23
defense of property 25
Department Of Natural Resources 2
dispute resolution 26, 27, 28
D permit 11, 12
duty to retreat 22, 23

e
educational requirements 2, 4
expire 7, 10

f
felony 8, 14
fingerprints 6
forbidden carry zones 11

h
Highway Patrol 11
hospitalization 9
HR 218 18

i
imminent danger 3

l
landlord 16
law enforcement 2, 3, 13, 14, 18, 19, 24, 29
license denials 10
liquor 11, 12

m
mediation 26, 27, 28
mental competency 9
minimum educational requirements 2
misdemeanor 8, 13, 14
motorcycles 13
motor vehicles 12, 13, 16, 17

n
National Rifle Association 2
negotiation 26, 27

o
offenses 8, 9
Ohio Commission On Dispute Resolution And Conflict Management 28
Ohio Peace Officer Training Commission 2
open carry 18

p
place of worship 11
plain sight 13, 14, 15, 16
police stations 11
private employers 16, 17
protection orders 3, 9

r
range time 5
recertification 10
reciprocity 18
renewal 10
residence 22, 23
residency 8
retired (military) 2

s
school safety zones 12
sealed record 2, 9
self-defense 20, 24
sheriff's criteria for issuing license 8
sheriffs' offices, hours 7, 11
standard warning sign 17
Statutory Reference(s)
R.C. Title 29 crimes when use of deadly force is not justified 23
R.C. 2901.05 rebuttable presumption to affirmative defense of self-defense 23
R.C. 2901.09(B) "castle doctine" 22
R.C. 2923.125(B)(3)(a) - (f) competency certifications 3
R.C. 2923.1213 emergency licenses 4
R.C. 2923.1213(B)(3) sealed records (temporary emergency license) 4
R.C. 2923.125(G)(1) trainers to provide publication 5
R.C. 2923.125(G)(1)(a) educational requirements for competency certification 5
R.C. 2923.125(G)(1)(b) range and live-fire experience for competency certification 5
R.C. 2923.125(G)(2) passage of written examination required 5
R.C. 2923.125(A), sheriff to provide application and CCW publication at no charge 7
R.C. 2923.125(B)(4) certification of reading publication 7
R.C. 2923.125(B)(1) application fee based on type of background check required 7
R.C. 2923.125(B)(2) applicants to provide a color photograph 7
R.C. 2923.125(B)(3) applicants to submit proof of competency 7
R.C. 2923.125(B)(5) fingerprinting 7
R.C. 2923.125 (D) (1) (a) – (h) disqualifying convictions 9
R.C. 2923.125 (D) (3) suspension of processing of an application if pending criminal case is outstanding 9
R.C. 2923.125 (D) (5) prohibits sheriffs from considering applicant's sealed records 9
R.C. 2923.125 (D) (1) (i) – (j) mental competency and protection order issues 9
R.C. 2923.13 disabilities that prohibit possession of firearm 9
R.C. 2923.125(D)(2)(b) written notification and reasoning for denial 10
R.C. 2923.127 apeals process 10
R.C. 2923.16 (E) transport of loaded concealed handguns in motor vehicles 16
R.C. 2923.16 (B) – (C) transportation of firearms in a vehicle 16
R.C. 2923.126(C) private employers 17
R.C. 2923.126(C)(3) sign that prohibits persons from carrying concealed firearms on that property 17
suspension 8, 9

t
temporary emergency license 3
training 2

u
universities 11

RICHARD CORDRAY

OHIO ATTORNEY GENERAL

30 East Broad Street 17th Floor
Columbus, Ohio 43215
(800) 282-0515
www.OhioAttorneyGeneral.gov

OHIO
PEACE OFFICER TRAINING ACADEMY

This manual is provided to you in partnership with your local Sheriff.
For additional copies, please contact:

Revised 09/03/09